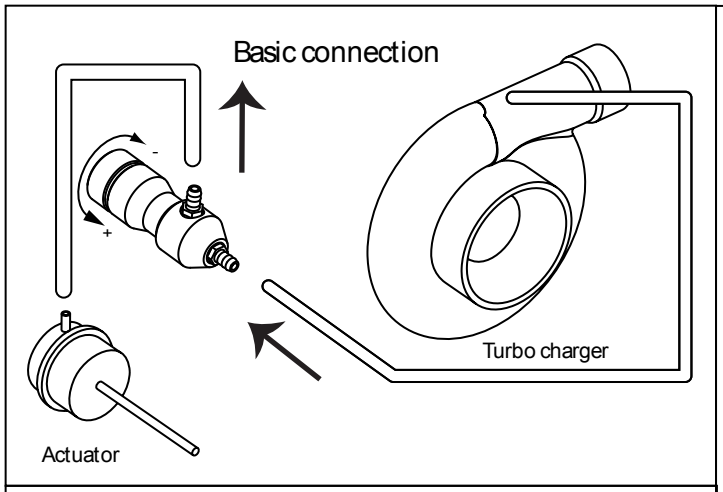

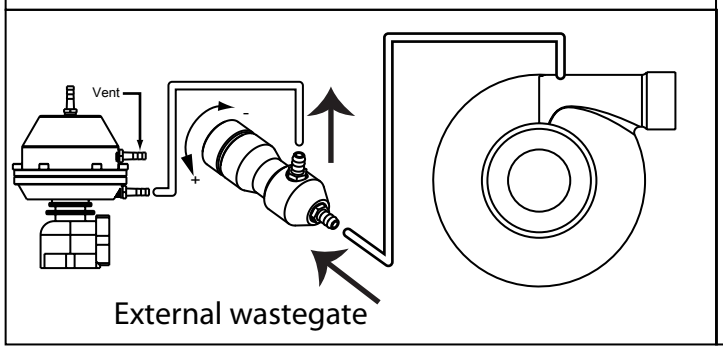

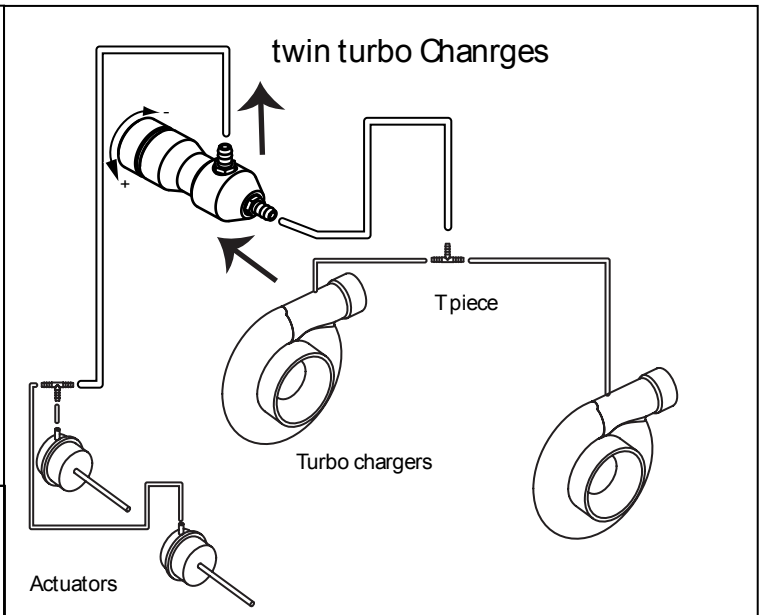
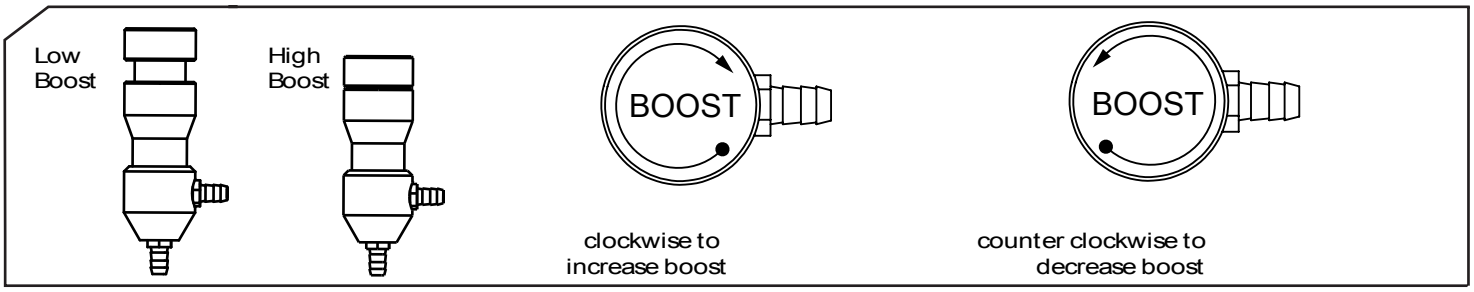
installation:
Connect the MBC-R according to the diagram with the shortest possible vacuum hose connection and away from heat